Roll·Rite® 62XX Pull-Style Tarper

Quick & Easy Operation

- **Smooth Operating...** pull style tarping mechanism pulls out easily. Fast, spring powered retractable "window shade" roll-up increases your productivity on the job

62XX Series Spec Sheet

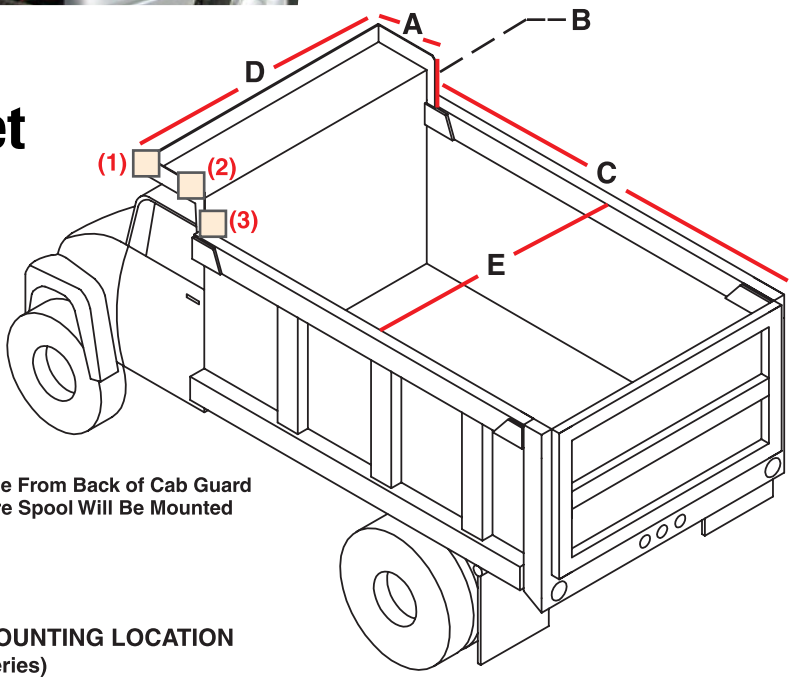

Please use inches for unit measurement.

1. Mounting Location:

Check One Box To Show Mounted Spool Position :

- ☐ **(1) Mounted on front of cab shield**
- ☐ **(2) Mounted on rear of cab shield**
- ☐ **(3) Mounted on to side rails**

2. Required Truck Measurements:

_____ = **(A)** Cab Guard Length **-OR-** **Distance From Back of Cab Guard to Where Spool Will Be Mounted**

_____ = **(B)** Cab Guard Rise

_____ = **(C)** Box Length

_____ = **(D1, D2, D3) Outside Width Of MOUNTING LOCATION (From 66 to 96 inches for for 62xx Series)**

3. Tarp Measurements:

_____ = Width **(Generally should be slightly less than (E) Box Width)**

_____ = Length **Calculate Length =** _____ + _____ + _____ + **24" (2 ft)**
(A) (B) (C)

_____ **Specify Roll·Rite® Tarp Fabric by Part Number: See back page.**

4. System Spec: **Please Indicate the Part Number For Your System Below.**

62_____ D= Width of Mounting Location (from 66 to 96 inches as specified above)
(D)

Roll·Rite®
Automated Covering Systems
A Safe Fleet Brand

Inside Sales & Service: 1-800-297-9905